Sultan Qaboos University

College of Engineering

Department of Electrical and Computer Engineering

ECCE4227-Embedded Systems

Automated Parking Gate System with Car Counter

Student names / IDs:
Mohammed Abu Qasidah 138728
Hamed Al Shaile 136436
Safwan Al Anqoodi

- **Overview:**

  The Smart Parking System is an embedded solution designed to efficiently manage and monitor the availability of parking spaces in a small-scale parking facility with a capacity of three vehicles. The core objective is to provide real-time information to drivers, preventing congestion and frustration caused by searching for parking in a full lot. The system automates the process of tracking vehicles entering and exiting the parking area, indicating space availability through visual (LEDs, LCD) and auditory (buzzer) signals.
  The ATmega8 microcontroller, operating with an 8MHz clock frequency, serves as the central processing unit. It continuously monitors input from an entry and an exit sensor. Based on these inputs, it updates the count of parked cars, controls a red and green LED to signal 'full' or 'space available' respectively, and displays relevant information on an LCD screen. In a 'full' scenario, the system actively discourages entry attempts by flashing the red LED and sounding a buzzer. Furthermore, the system is designed to output the current occupancy status to a computer via serial communication, simulated using a virtual terminal in Proteus, for data logging or remote monitoring purposes.

- **Description of the Inputs and Outputs**

  The system comprises the following inputs and outputs:

- Inputs:
  - Entry Sensor: An infrared (IR) proximity sensor placed at the parking entrance. When a vehicle approaches the entrance, this sensor sends a signal to the microcontroller.
  - Exit Sensor: An IR proximity sensor positioned at the parking exit. This sensor detects vehicles leaving the parking area and signals the microcontroller.

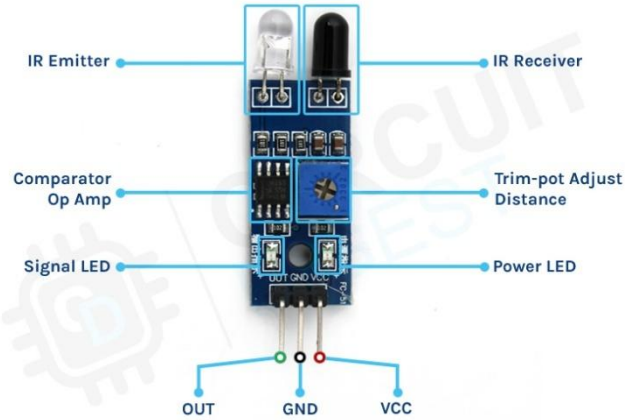

- Outputs:
  - Green LED: When a car approaches the entry sensor and there is at least one parking space available, the green LED illuminates for a few seconds, indicating that entry is permitted.
  - Red LED: The red LED is normally on, indicating that drivers should be cautious or that the system is active. When the parking lot is full and a car attempts to enter, the red LED flashes to signal that no spaces are available.

- Buzzer: The buzzer activates for a short duration (e.g., one second) in conjunction with the flashing red LED when a vehicle attempts to enter a full parking lot, providing an audible alert.

- LCD Display (16x2 or similar): The LCD provides real-time information to the user.
  - When spaces are available, it displays Line 1: Cars: N/3 (where N is the current number of cars) Line 2: Space Available
  - When the parking space is full, it displays Line 1: Cars: 3/3 Line 2: Parking Full

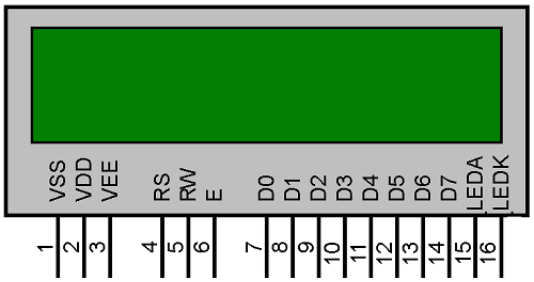

- Virtual Terminal Output (via TXD pin): The microcontroller transmits the current car count ("Cars: N/3") to a virtual terminal connected to its TXD pin. This demonstrates the system's capability for serial data communication.

➢ **<u>Processing by the Microcontroller</u>**

The microcontroller monitors the digital inputs from the sensors to track car movements. When a car is detected at the entrance, it checks whether the current count of parked cars is below the maximum limit (3). If yes, the green LED turns on momentarily, the LCD increments the car count, and the virtual terminal displays the status. If the parking is full, the red LED blinks, a buzzer sounds for one second, and the LCD shows "Parking Full." Similar logic is used to detect existing cars, decrementing the count and updating the display accordingly.

➢ Design & Simulation

The smart parking system is designed around the ATmega8 microcontroller. The following block diagram illustrates the main components and their interconnections:

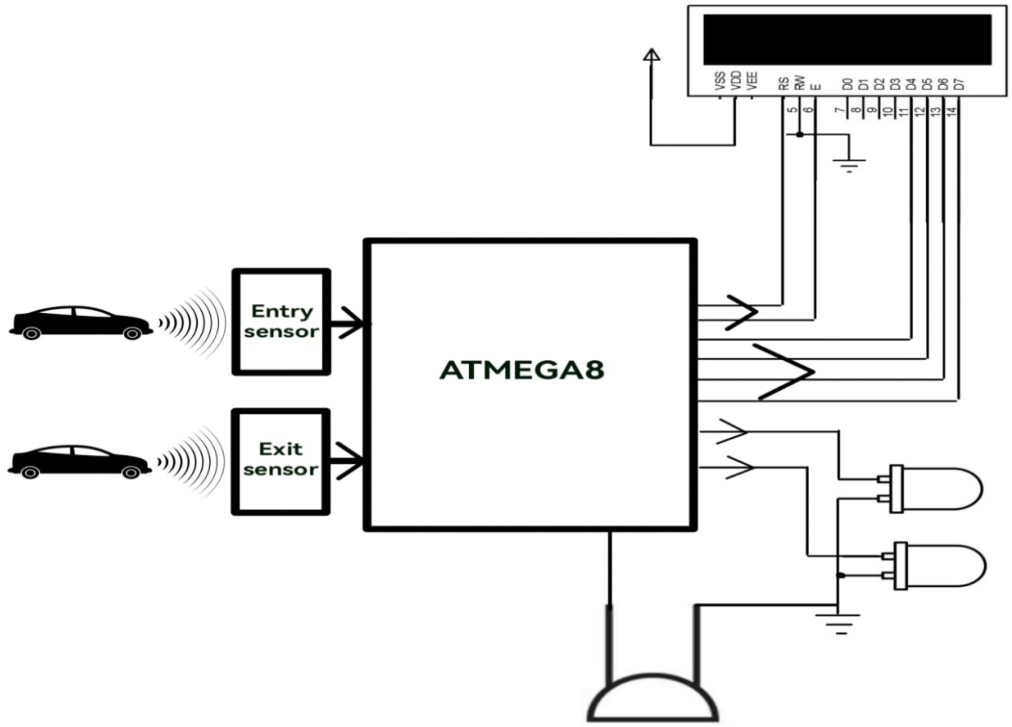

Entry Sensor → PD0
Exit Sensor →PD2
Green LED →PB0
Red LED →PB1
Buzzer →PB2
LCD Connections:
VSS → Ground
VDD → VCC
VEE→ Ground
RS → PC0
RW →Ground
E → PC1
D4 - D7 → PC2 – PC5

- **Proteus Simulation**

  To validate the system's functionality, the circuit was first designed and tested in Proteus. The simulation included the ATmega8 microcontroller (configured at 8 MHz), entry/exit sensors (modeled as pushbutton switches for testing), LEDs, a buzzer, and a 16x2 LCD. A virtual terminal was connected to the microcontroller's TXD pin (PD1) to replicate the LCD's output on a computer. The simulation tested critical scenarios

1. **Normal Operation**: Green LED activation and LCD updates when a car enters/exits.
2. **Full Parking**: Red LED blinking, buzzer alarm, and "PARKING FULL" LCD message.
3. **Data Transmission**: Virtual terminal mirroring the LCD's "CARS: N/3" status.

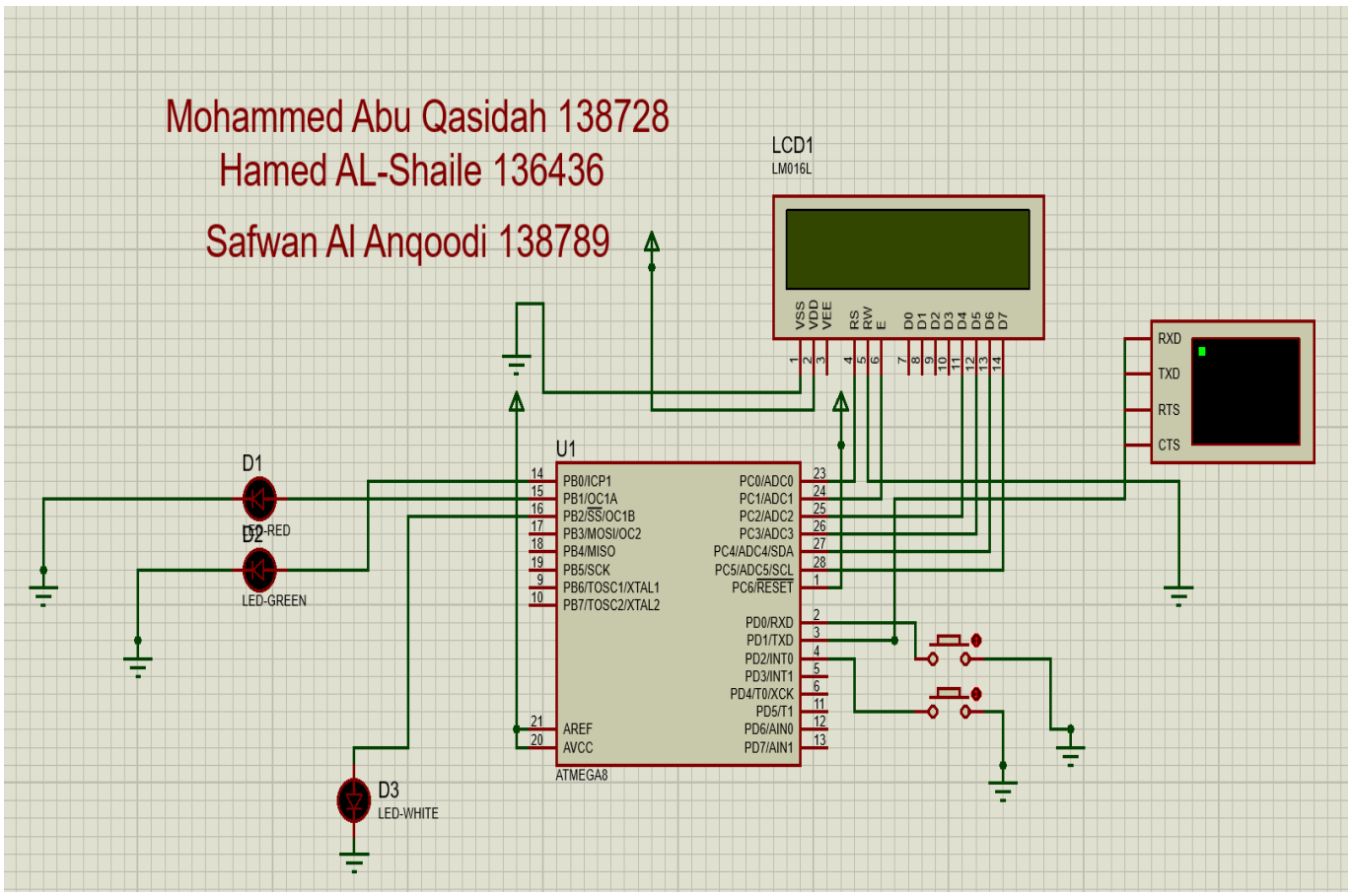

Figure 1: Proteus Schematic of the Smart Parking System.

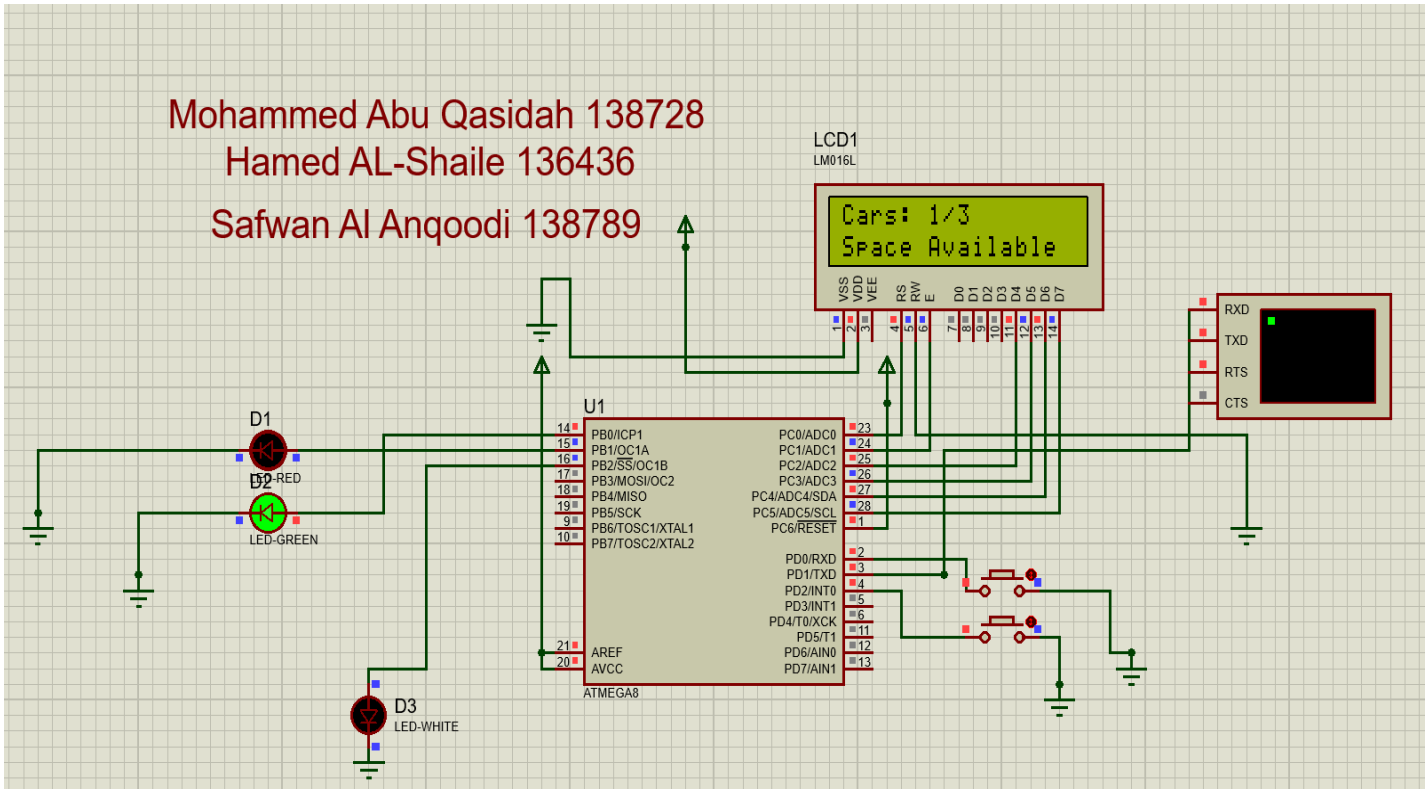

Figure 2: Green LED activation and LCD updates when a car enters

---

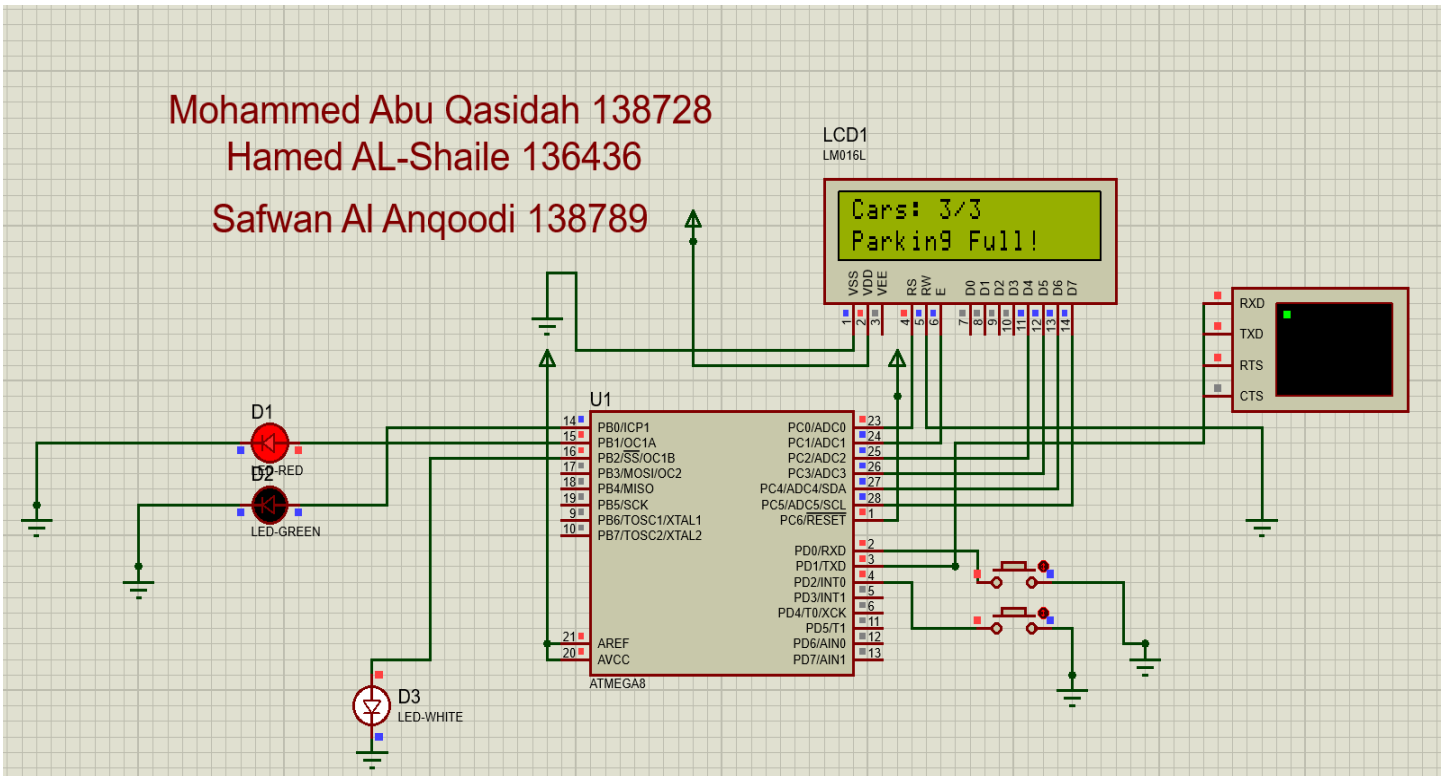

Figure 3: Red LED blinking, buzzer alarm, and "PARKING FULL" LCD message.

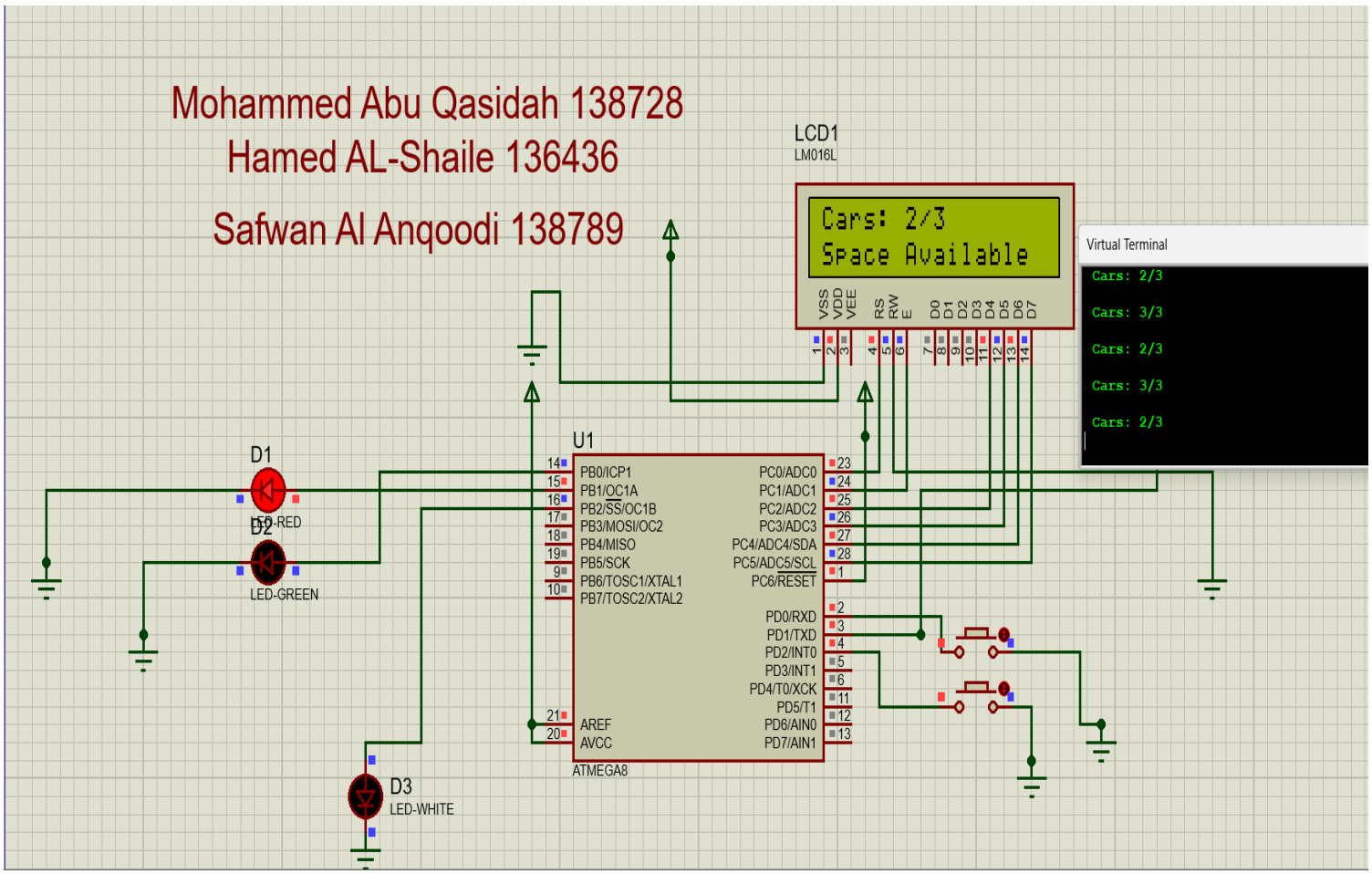

Figure 4: Virtual terminal mirroring the LCD's "CARS: N/3" status.

- **Implementation and Result**

The implementation phase involved translating the simulated design into a simple, physical embedded system. The steps were as follows:

1.Component Sourcing and Preparation:

All necessary components were gathered, including the ATmega8 microcontroller, breadboard, connecting wires, IR proximity sensors, red and green LEDs, a buzzer, a 16x2 character LCD, and a cable to upload the code into the microcontroller.

2.Circuut implementation:

Initially, due to challenges in sourcing suitable IR sensors, simple push-button switches were used to simulate the entry and exit sensors. Each switch was connected to a designated input pin on the ATmega8.

The LEDs and the buzzer were connected to their respective output pins on the microcontroller, and the LCD was connected as per the design (4-bit mode).
Once IR proximity sensors were acquired, the switches were replaced. The output of each IR sensor was connected to the designated input pin on the ATmega8. The sensors were powered from the 5V supply.

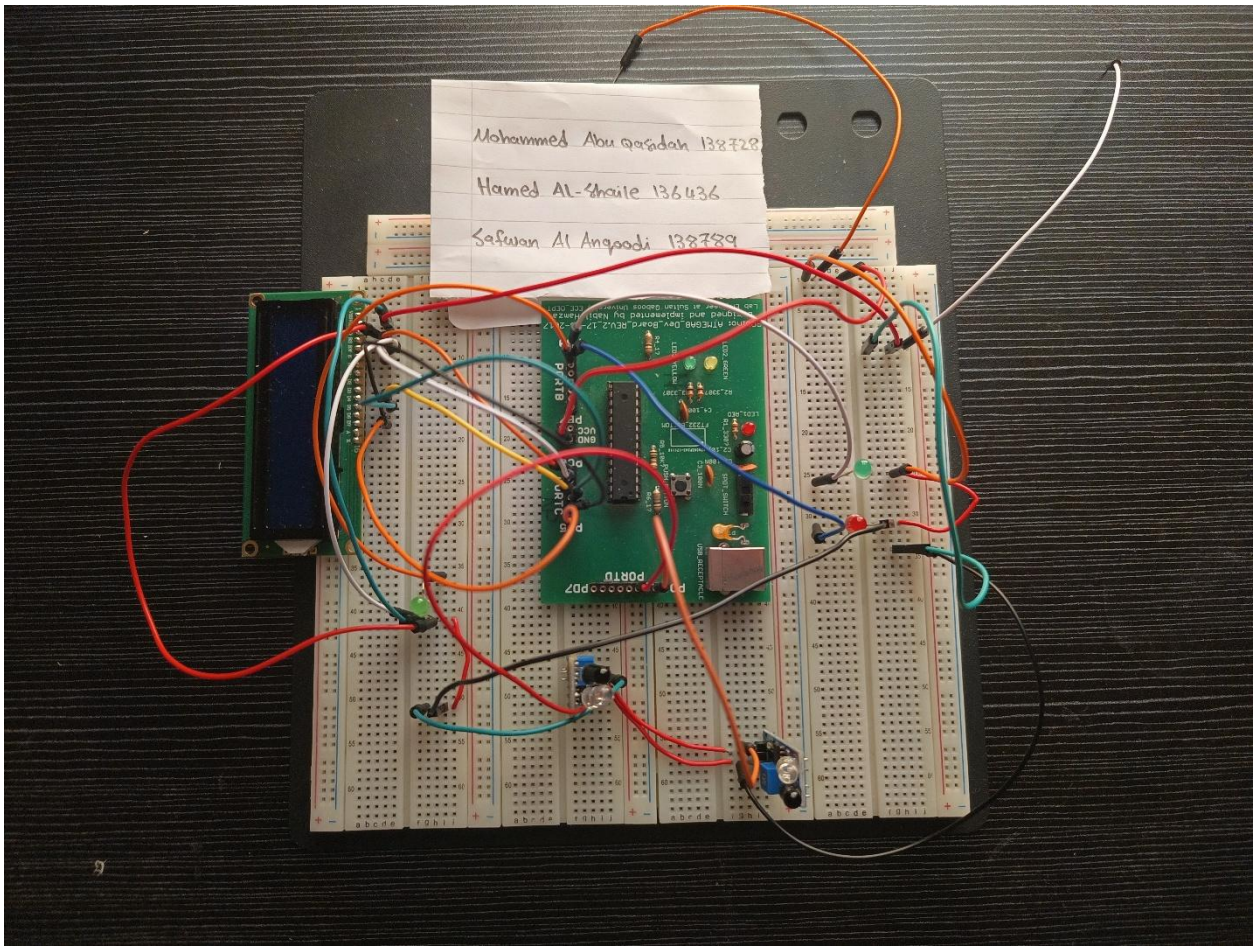

Figure5: The implemented circuit without powering

3.Powering and Testing:

The circuit was powered on, and the Initial testing focused on:

- Basic microcontroller operation (The green and red LEDs)
- LCD initialization and display of static text.
- Sensor input detection.

- LED and buzzer output verification based on sensor inputs and internal logic.
- Correct car counting and status display on the LCD.

Figure 6 shows the initial state of the system with the red LED is on

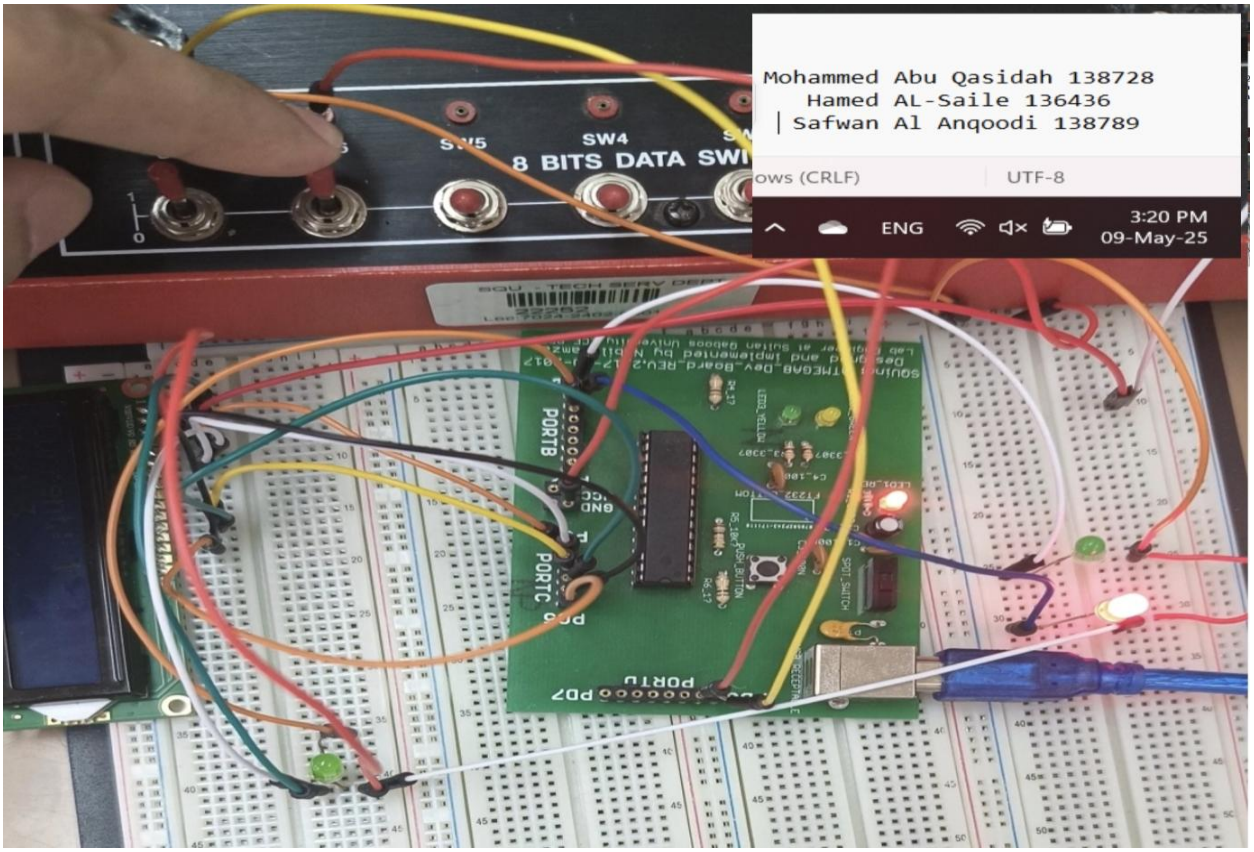

Figure6: Initial state of the circuit

Figure 7 shows the green LED is on when a car tries to enter

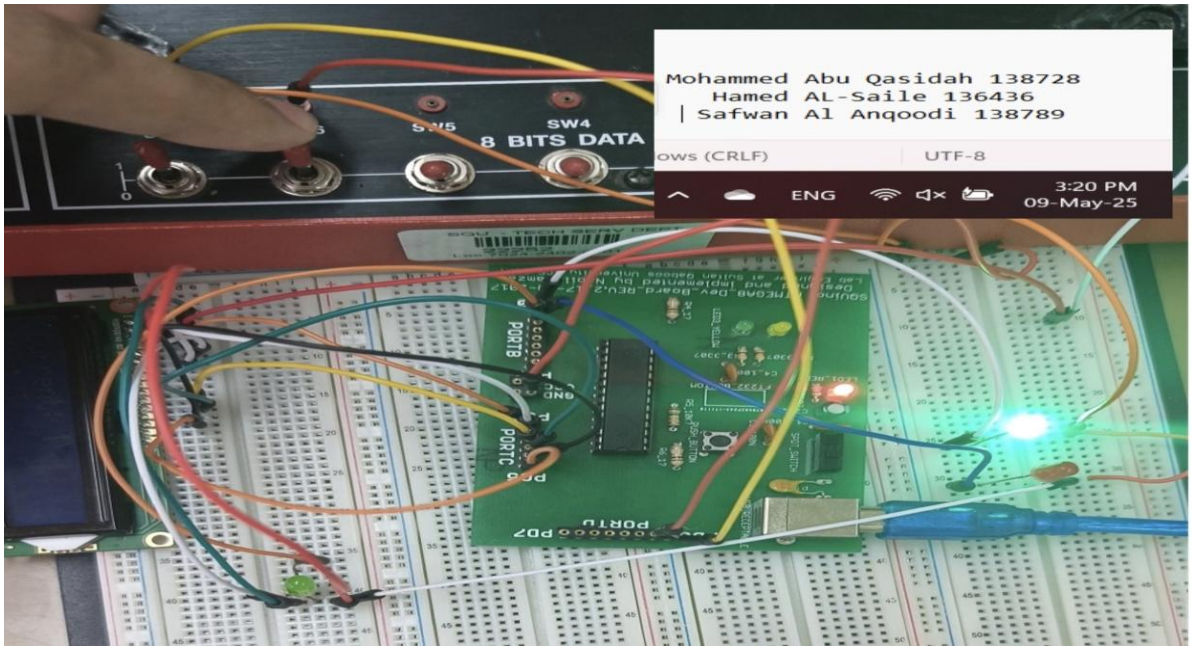

Figure7: a car tries to enter, and the green LED is on

Figure 8 shows the buzzer is on (represented by a green LED on the left) when the parking lot is full and a car tries to enter

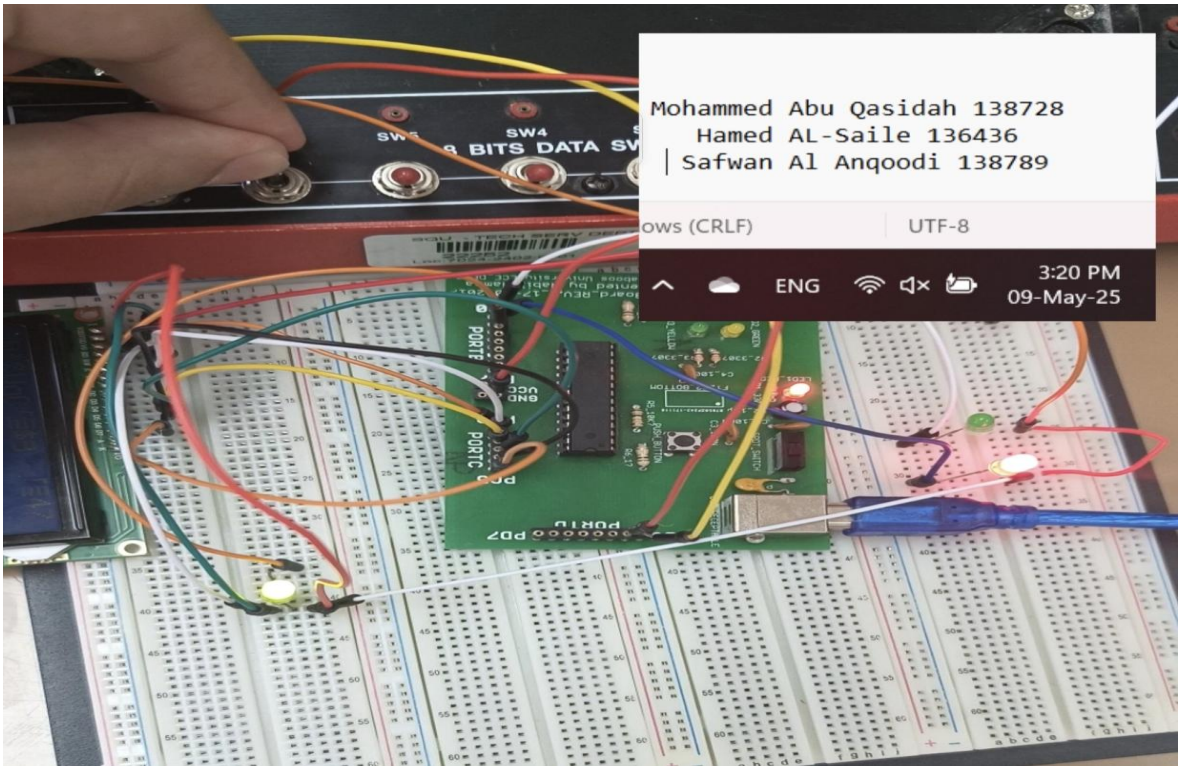

Figure 8: a car trying to enter when the parking is full, and the buzzer is on

Figure 9 shows the status of the LCD when the parking lot is full

Figure 9: The LCD display when the parking is full

➢ **<u>Challenges and Resolutions:</u>**

Several challenges were encountered during the implementation phase:

- **LCD Programming:** A significant challenge was programming the LCD module. As this was not extensively covered in prior coursework, a considerable amount of time was dedicated to understanding the LCD's command set, initialization sequence, and data transfer protocols.
    - **Resolution:** We consulted datasheets for the specific LCD model, studied online tutorials, and examined example code snippets.

- **Sensor Availability and Initial Substitution:** Finding suitable and reliably working IR proximity sensors in local stores proved difficult initially.
    - **Resolution:** To proceed with development and testing of the core logic, we temporarily used simple push-button switches as substitutes for the entry and exit sensors. This allowed us to verify the microcontroller's counting mechanism, LED control, and LCD display updates. Later, when IR sensors were acquired, they were connected into the microcontroller, replacing the switches.

- **LCD VSS/VDD Wiring Discrepancy:** a strange problem occurred with the LCD power connections, In the Proteus simulation, the LCD worked correctly when its VSS pin (pin 1) was connected to VCC (+5V) and its VDD pin (pin 2) was connected to Ground. However, this is contrary to standard LCD datasheets.
    - **Resolution:** During the physical implementation, connecting the LCD as per the Proteus simulation did not work. After consulting the datasheet for the actual physical LCD module being used, we discovered that VSS (pin 1) must be connected to Ground, and VDD (pin 2) must be connected to VCC (+5V). Re-wiring these connections according to the physical component's datasheet resolved the issue.

- **Initial Project Scope (Servo Motor Gate):** In our initial project proposal, we planned to include a servo motor to simulate gate.
    - **Resolution:** During the design and early implementation phase, we re-evaluated the core purpose of the system. We determined that the primary goal was to inform drivers about space availability *before* they attempt to enter a potentially full area leading to a gate. A physical gate that opens regardless of space, if space *is* available doesn't add much to the core information system, so We decided to simplify the design by replacing the servo motor with a buzzer, focusing on the information aspect (LEDs and LCD) and the "full" alert (buzzer and flashing LED). This allowed us to concentrate on perfecting the core sensing, counting, and display logic.
    -

- **Lab Access Limitations:** A significant challenge encountered was related to lab accessibility towards the project's completion. An initial, fully functional version of the parking system was assembled and documented with photographs. Following this, we implemented several improvements to enhance the system, such as the buzzer and the LCD display, these final enhancements were completed close to the submission deadline.

    - **Resolution:** Unfortunately, due to limited lab availability during the critical final stages of the project, we were unable to schedule time to retake photographs of the system after these improvements were implemented. As a result, the photographs included in this report depict the earlier, fully operational prototype. However, all design descriptions, circuit details, and the system's operational logic discussed throughout this report pertain to the final, improved version. This final version, incorporating all enhancements, will be the one presented during the project demonstration.

- **Conclusion:**

This project successfully demonstrated the design and implementation of an ATmega8-based Smart Parking System. The system accurately tracked vehicle entry and exit, managed parking capacity, and provided clear visual (LEDs, LCD) and auditory (buzzer) feedback to users regarding space availability. The integration of serial communication for displaying car count on a virtual terminal also showcased a basic data logging/monitoring capability.

Key insights gained include:

- Importance of Modular Design: Breaking down the system into modules (sensor input, processing logic, display output) simplified both the design and debugging processes.
- Bridging Simulation and Reality: While Proteus simulation is an invaluable tool for initial design and testing, discrepancies can exist between simulated models and physical components (as seen with the LCD wiring). Verifying against component datasheets is crucial for successful hardware implementation.
- Iterative Development: The approach of starting with basic functionality and gradually adding complexity, including using substitute components like switches when primary sensors were unavailable, allowed for continuous progress and effective problem-solving.
- Practical Problem Solving: Overcoming challenges such as LCD programming and component sourcing provided valuable hands-on experience in embedded systems development beyond theoretical knowledge. The decision to replace the servo with a buzzer was a practical design choice based on project goals and resource management.

- Reflection on the System's Performance and Potential Improvements

The implemented system performed reliably according to its design specifications, correctly managing the parking capacity of three cars and providing appropriate user feedback. The response time of the sensors and the subsequent actions of the microcontroller were adequate for the intended application.

Potential improvements for future development could include:

- Increased Capacity: Modifying the software to handle a larger number of parking spaces.
- Sensor Technology: Utilizing more sensor types like ultrasonic sensors or magnetometers for improved accuracy and reliability in various environmental conditions.

Overall, this project provided a solid foundation in embedded system design, from conceptualization and simulation to physical implementation and troubleshooting. The insights gained and the challenges overcome have been invaluable learning experiences.